# N39 Hardware Design

**GPS Module Series**

**Version:** V1.0

**Date:** 2017-05-23

Shanghai Mobiletek Communication Ltd

## Notice

Some features of the product and its accessories described herein rely on the software installed, capacities and settings of local network, and therefore may not be activated or may be limited by local network operators or network service providers.Thus, the descriptions herein may not exactly match the product or its accessories which you purchase.Shanghai Mobiletek Communication Ltd reserves the right to change or modify any information or specifications contained in this manual without prior notice and without any liability.

## Copyright



## DISCLAIMER

ALL CONTENTS OF THIS MANUAL ARE PROVIDED “AS IS”. EXCEPT AS REQUIRED BY APPLICABLE LAWS, NO WARRANTIES OF ANY KIND, EITHER EXPRESS OR IMPLIED, INCLUDINGBUT NOT LIMITED TO, THE IMPLIED WARRANTIES OF MERCHANTABILITY AND FITNESS FOR A PARTICULAR PURPOSE, ARE MADE IN RELATION TO THE ACCURACY, RELIABILITY OR CONTENTS OF THIS MANUAL.TO THE MAXIMUM EXTENT PERMITTED BY APPLICABLE LAW, IN NO EVENT SHALL SHANGHAI MOBILETEKCOMMUNICATION LTD BE LIABLE FOR ANY SPECIAL, INCIDENTAL, INDIRECT, OR CONSEQUENTIAL DAMAGES, OR LOSS OF PROFITS, BUSINESS, REVENUE, DATA, GOODWILL SAVINGS OR ANTICIPATED SAVINGS REGARDLESS OF WHETHER SUCH LOSSES ARE FORSEEABLE OR NOT.

# Version History

| Date | Version | Modify records | Author |
|---|---|---|---|
| 2017-05-23 | V1.0 | Initial | Tianpan.Lin |
| | | | |
| | | | |
| | | | |
| | | | |
| | | | |
| | | | |
| | | | |
| | | | |
| | | | |

# Content

# 1. Introduction

This document describes the hardware interface of the MOBILETEK module N39 which can be used as a stand-alone GPS or A-GPS (Assisted Global Positioning System) receiver with a patch antenna on top of the module. As a wide range of applications can be integrated in N39, all functional components of N39 are described in great detail.

# 2. N39 Overview

N39 is a stand-alone GPS or A-GPS receiver. With built-in LNA and Patch Antenna, N39 don't need an extra antenna and external LNA. N39 can track as low as -165dBm signal even without network assistance.The N39 has excellent low power consumption characteristic (acquisition 18mA, tracking 16mA).N39 supports various location and navigation applications, including autonomous GPS, QZSS, EPO™, EASY™.

Key Features

- GPS receiver, supports QZSS
- 22 tracking/66 acquisition-channel, up to 210 PRN channels
- Small footprint: 16.0*16.0* 6.20mm, 13-pin LCC package
- Patch dimensions: 15.0*15.0 * 4.0mm
- 12 multi-tone active interference cancellers and jamming elimination
- Indoor and outdoor multi-path detection and compensation
- Max NMEA update rate up to 5 HZ
- Advanced software features
  1. EASY self-generated orbit prediction

2. EPO™ orbit prediction
3. PPS sync NMEA
4. supports logger function
5. supports active interference cancellation (AIC)

- Pulse-per-second (PPS) GPS time reference

  1. Adjustable duty cycle
  2. typical accuracy: ±10ns

- Interface

  UART0

- Operating temperature: -40℃ ~ +85℃
- Accuracy 2.5m CEP@-130dBm
- RoHS compliant

The module provides complete signal processing from antenna input to host port in either NMEA messages. The module requires 2.8V~4.3V power supply. The host port is configurable to UART. Host data and I/O signal levels are 2.85V CMOS compatible.

## 2.1 N39 Functional Diagram

The following figure shows a functional diagram of the N39 and illustrates the mainly functional parts:

- The GPS chip
- SAW filter
- LNA
- Patch Antenna interface
- The communication interface
- The control signals

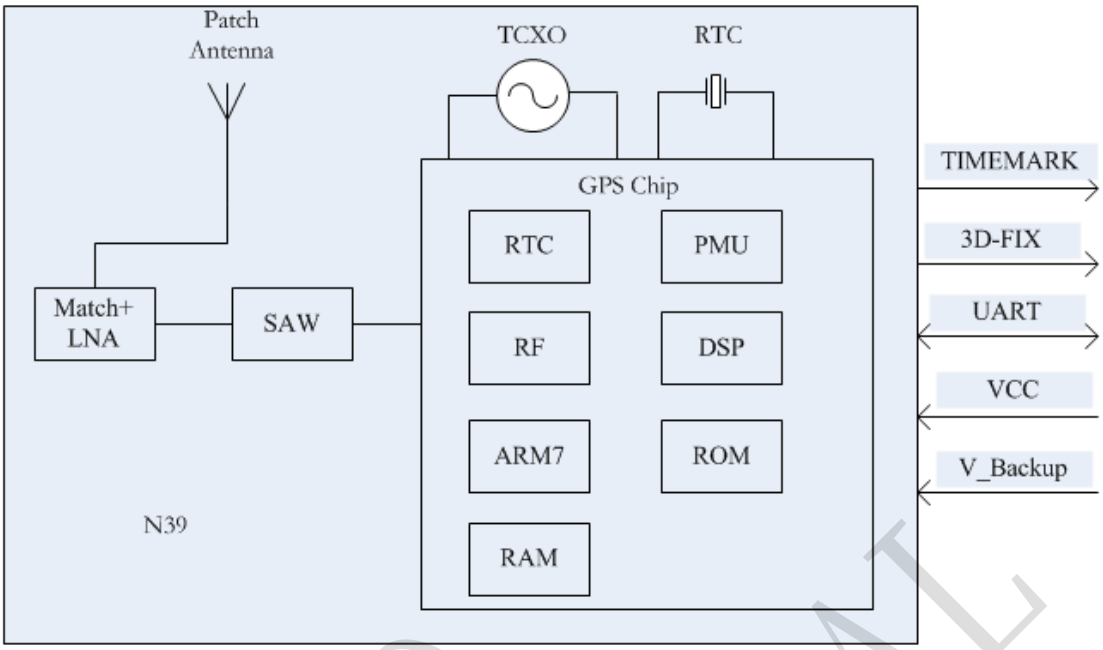


Figure 1 N39 functional diagram

## 2.2 GPS Performance

Table 1 GPS performance

| Parameter | Description | Performance | | | |
|---|---|---|---|---|---|
| | | Min | Type | Max | Unit |
| Horizontal Position Accuracy(1) | Autonomous | | <2.5 | | m |
| Velocity Accuracy(2) | Without Aid | | 0.1 | | m/s |
| | DGPS | | 0.05 | | m/s |
| Acceleration Accuracy | Without Aid | | 0.1 | | $m/s^2$ |
| | DGPS | | 0.05 | | $m/s^2$ |
| Timing Accuracy | | | 10 | | ns |
| Dynamic Performance | Maximum Altitude | | | 18000 | m |
| | Maximum Velocity | | | 515 | m/s |

| | | | | | |
|---|---|---|---|---|---|
| | Maximum Acceleration | | | 4 | G |
| Time To First Fix(3) | Hot start | | <1 | | s |
| | Warm start | | 30 | | s |
| | Cold start | | 32 | | s |
| TTFF with EASY™ | Hot start | | <1 | | s |
| | Warm start | | 5 | | s |
| | Cold start | | 15 | | s |
| Sensitivity(3) | Autonomous acquisition(cold start) | | -148 | | dBm |
| | Re-acquisition | | -160 | | dBm |
| | Tracking | | -165 | | dBm |
| Receiver | Channels | | 22 tracking/66 acquisition | | |
| | Update rate | | 1 | 5 | Hz |
| | Tracking L1, CA Code | | | | |
| | Protocol support NMEA,PMTK | | | | |
| Power consumption(4) | Acquisition | | 18 | | mA |
| | Continuous tracking | | 16 | | mA |
| | Sleep current | | 340 | | uA |
| | Backup current | | 8 | | uA |

(1) 50% 24hr static, -130dBm

(2) 50% at 30m/s

(3) GPS signal level: -130dBm

(4) Single Power supply 3.3V@-130dBm

## 2.3 General features

Table 2 General features

| Parameters | | Value |
|---|---|---|
| Supply voltage VCC | | 2.8V~4.3V |
| Supply voltage ripple VCC | | 54 mV(RMS) max @ f = 0~3MHz<br>15 mV(RMS) max @ f > 3 MHz |
| Power consumption(acquisition) | | 18 mA type. @ VCC=3.3 V |
| Power consumption(sleep) | | 340 uA type. @ VCC=3.3 V |
| Storage temperature | | -40ºC~+125ºC |
| Operating temperature | | -40ºC~+85ºC (note 1) |
| I/O signal levels | $V_{IL}$ | -0.3V~0.8V |
| | $V_{IH}$ | 2.0V~3.6V |
| | $V_{OL}$ | -0.3V~0.4V |
| | $V_{OH}$ | 2.4V~3.1V |
| I/O output sink/source capability | | +/- 3mA max |
| I/O input leakage | | +/- 10 uA max |
| Host port | | UART0 |
| Serial port protocol (UART) | | NMEA; 8 bits, no parity, 1 stop bit; 9600 baud |
| TIMEMARK output (1PPS) | | 1 pulse per second, synchronized at rising edge, pulse length 100m |

**Note 1: Operation in the temperature range –40°C~ –30°C is allowed but Time-to-First-Fix performance and tracking sensitivity may be degraded.**

# 3. Package Information

## 3.1 Pin out Diagram

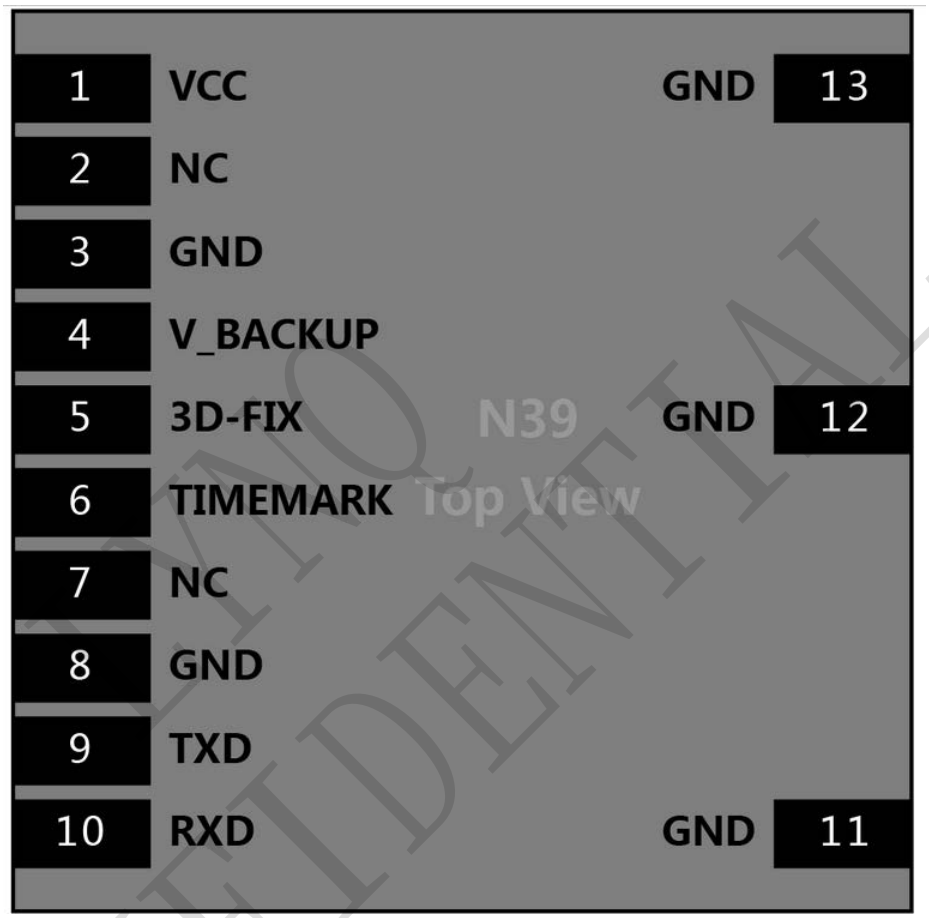


Figure 2 N39 pin out diagram (Top view)

## 3.2 Pin Description

Table 3 Pin description

| Pin name | Pin number | I/O | Description | Comment |
|---|---|---|---|---|
| **Power supply** | | | | |
| VCC | 1 | I | Main power input, Typical: | Add a 4.7uF capacitor to this |

| | | | | |
|---|---|---|---|---|
| | | | 3.3V. The VCC ripple must be controlled under 54mVpp | pin for decoupling |
| VCC_BACKUP | 4 | I | The backup battery input power supply for RTC 2.0V~4.3V, Typical 3.0V | If unused, keep open |
| GND | 3,8,11,12,13 | | Ground | |
| **Host port interface** | | | | |
| TXD | 9 | O | Serial data output of NMEA | |
| RXD | 10 | I | Serial data input for firmware update | |
| **GPIOS** | | | | |
| 3D-FIX | 5 | O | 3D-fix indicator | |
| TIMEMARK | 6 | O | 1PPS Time Mark Output 2.85V CMOS Level ,timing pulse related to receiver time | If unused, keep open |
| **Other interface** | | | | |
| NC | 2,7 | | Not Connected | |

## 3.3 Package Dimensions

Following figure shows the Mechanical dimensions of N39 (top view, side view and bottom view).

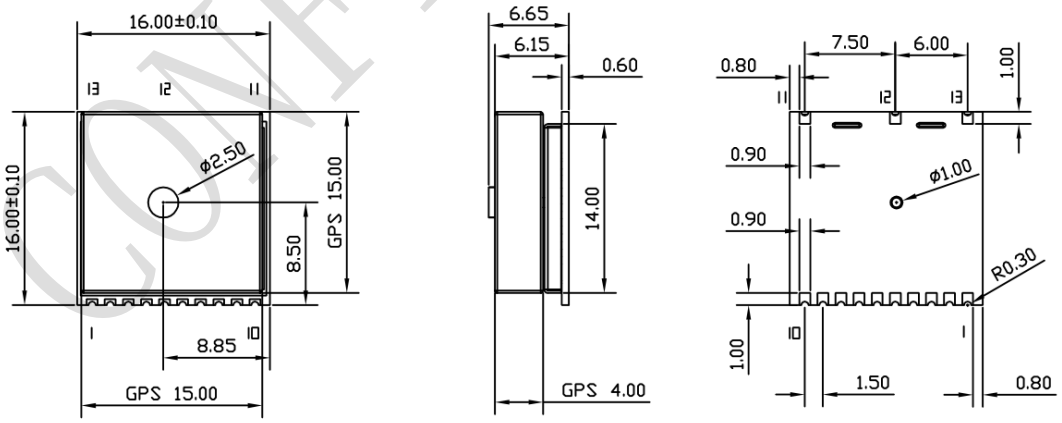


Figure 3 N39 mechanical dimensions (Unit: mm)

## 3.4 N39 Recommended PCB Decal

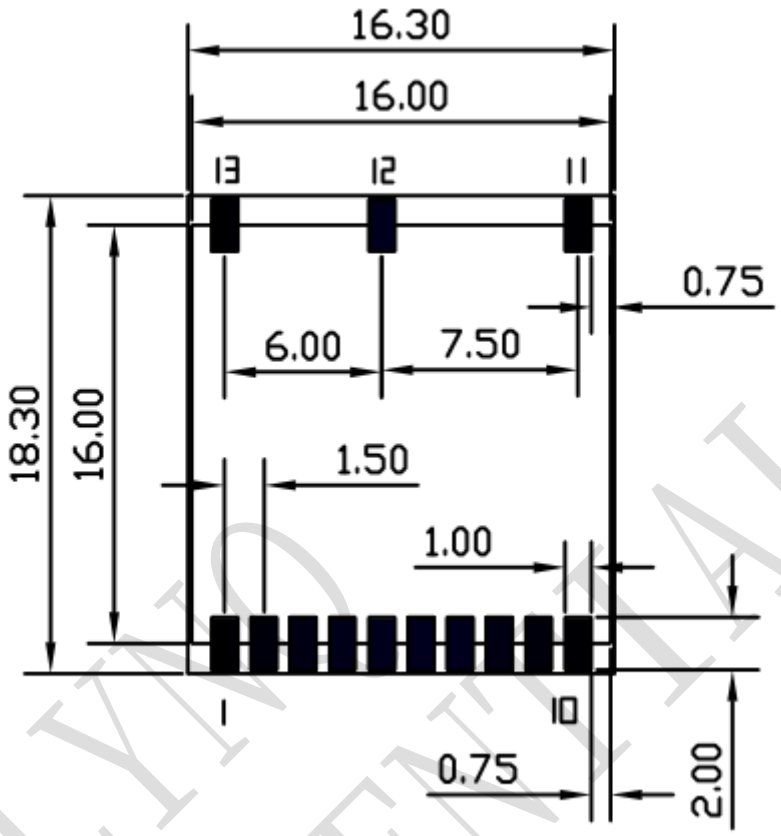


Figure 4 Recommended PCB decal (top view) (Unit: mm)

# 4. Application Interface

## 4.1 Power Management

### 4.1.1 Power Input

The power supply range of N39 is from 2.8V to 4.3V. The power supply should be able to provide sufficient current up to 100mA.

The power supply range of V_BACKUP is from 2V to 4.3V, typical 3.0V, suggest customer keep the V_BACKUP supply active all the time, the module will perform a quick start every time it is power-on.

### 4.1.2 Starting N39

When power is first applied, N39 goes into operation mode.

### 4.1.3 Verification of N39 Start

System activity indication depends upon the chosen serial interface: when it is activated, N39 will output messages at the selected UART speed and message types.

### 4.1.4 Power Saving Modes

N39 supports operating modes for reduced average power consumption like standby mode, backup mode.

- **Sleep mode:** In this mode the receiver stays at full on power state. When this mode that can be wake up by the host sends the command through the communication interface.
- **Backup mode:** In this mode the N39 must be supplied by the V_BACKUP pin and the VCC power should be cut off. The module could not achieve this mode through PMTK commands.

N39 provides very low leakage battery back up memory, which contains all the necessary GPS information for quick start up and a small amount of user configuration variables. It needs a 3V power supply for V_BACKUP pin.

### 4.1.5 Operating Mode

Table 4 Power supply and clock state according to operation mode

| Mode | VCC | V_BACKUP | Internal LDO | Main Clock | RTC Clock |
|---|---|---|---|---|---|
| Full on | on | on | on | on | on |
| Sleep | on | on | on | off | on |
| Backup | off | on | off | off | on |

**Full on Mode**

The module will enter full on mode after first power up with factory configuration settings. Power consumption will vary depending on the amount of satellite acquisitions and number of satellites in track.

**Sleep Mode**

Sleep mode means a low quiescent (340uA type) power state, non-volatile RTC, and backup RAM block is powered on. Other internal blocks like digital baseband and RF are internally powered off. The power supply input VCC shall be kept active all the time, even during sleep mode.

Entering into sleep mode is sent PMTK command through the communication interface by host side. Waking up from sleep mode is sent any byte through the communication interface by host side.

**Backup Mode**

This connects to the backup power of the module. Power source (such as battery or cap) connected

to V_BACKUP pin will help the chipset in keeping its internal RTC running when the VCC power source is turned off. The voltage should be kept between 2.0~4.3V, Typical 3.0V.

The V_BACKUP power should be kept active all the time, the module will perform a quick start every time it is power-on.

## 4.2 UART Interface

N39 includes one UART interface for serial communication. The UART0 is as NEMA output and PMTK command input. The receiver (RXD0) and transmitter (TXD0) side of every port contains a 16-byte FIFO and has 256 bytes URAM. UART can provide the developers signal or message outputs.The baud rate is 9600 kbps.

## 4.3 TIMEMARK Output

The TIMEMARK pin outputs one pulse-per-second (1PPS) pulse signal for precise timing purposes. The TIMEMARK signal can be provided through designated output pin for many external applications. This pulse is not only limited to be active every second but also allowed to set the required duration, frequency, and active high/low by programming user-defined settings.

## 4.4 A-GPS DGPS and EASY™

A-GPS is the meaning of Assisted GPS, which is a system that can improve the startup performance, and time-to-first-fix (TTFF) of a GPS satellite-based positioning under certain conditions. N39 module supports EPO file, EASY™.

### 4.4.1 EPO

The N39 supports the EPO (Extended Prediction Orbit) data service. The EPO data service is supporting 6 hours orbit predictions to customers. It need occasional download from EPO server. Supply of aiding information like ephemeris, almanac, rough last position and time and satellite status

and an optional time synchronization signal will reduce time to first fix significantly and improve the acquisition sensitivity.

The user should update the EPO files from the EPO server daily through the internet. Then the EPO data should send to the N39 by the HOST side. N39 has the short cold TTFF and warm TTFF, when the A-GPS is used.

**Note: For more information about EPO, please contact Mobiletek sales.**

### 4.4.2 EASY™

N39 supports EASY™(Embedded Assisted System) is Self-Generated Orbit Prediction feature.By comparison EPO/Hot Still/AGPS,it provides up to 3 days GPS orbit prediction ability without any host CPU portiong or internet connection requirement.

Backup must be supply always on power for keeping EASY™ Self-Generated Orbit Prediction feature.

## 4.5 GPS Antenna

N39 has integrated a internal GPS antenna,which is a passive patch antenna.Patch antenna size is 15*15*4mm.The customer does not need tuning the GPS antenna additionally.

The specifications of the integrated GPS antenna are presented as following table:

Table 5 Antenna Specifications

| Parameter | Specification | |
|---|---|---|
| Passive Antenna Recommendations | Frequency range | 1575.42±2MHz |
| | Band Width | 9MHz |
| | Frequency Temperature | 0±20ppm/℃ |

| | | |
|---|---|---|
| | Coefficient | |
| | Polarization | RHCP |
| | Gain at Zenith | 1dBic |
| | VSWR | <1.5dB |
| | Impedance | 50Ω |

The test result of the antenna is shown as the following figure. The GPS antenna provides good radiation efficiency,right hand circular polarization and optimized radiation pattern.


Figure 5 Patch Antenna Test Result with Ground Plane 50mm*50mm

### 4.5.1 Application Notes

The GPS Patch antenna consists of a radiating patch on one side of a dielectric material substrate backed by a ground plane on the other side.

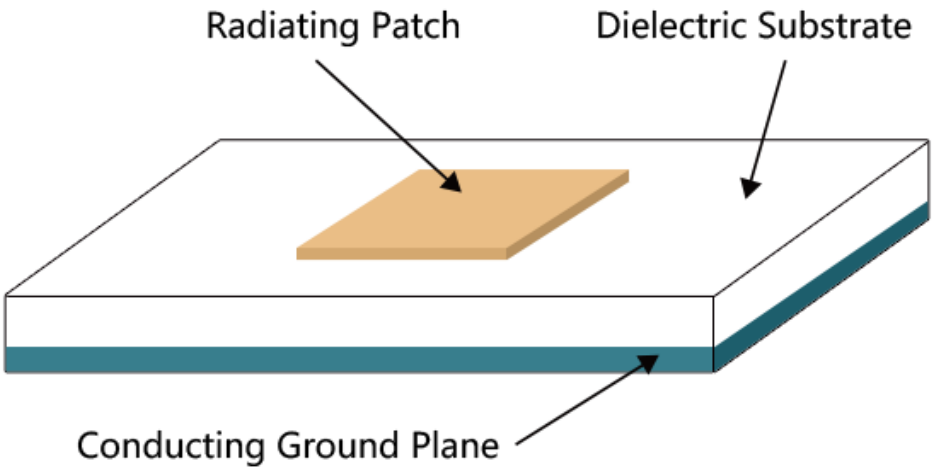


Figure 6 GPS Patch antenna on the Main Board

Customer can refer to the following rules,when the N39 is integrated into the main Board:

1. The most important rule is to ensure the antenna towards the sky.

2. The antenna should not be covered by any metalized enclosure or metal device.

3. The antenna must be placed far away from memory,camera,LCM,TP,DCDC etc high power high heat erea.

4. The height of device around the module,should not exceed the antenna.The components which height is more than 6.4mm, must be kept more than 10mm distance away from module.

# 5. Electrical Reliability and Radio Characteristics

## 5.1 Absolute Maximum Ratings

The absolute maximum ratings stated in Table 6 are stress ratings under non-operating conditions. Stresses beyond any of these limits will cause permanent damage to N39.

Table 6 Absolute maximum ratings

| Parameter | Min | Max | Unit |
|---|---|---|---|
| VCC | | 4.3 | V |
| Input Power at GNSS_ANT | | -12 | dBm |
| V_BACKUP | | 4.3 | V |
| I/O pin voltage | | 3.6 | V |
| Storage temperature | -45 | +125 | ℃ |
| Operating Temperature | -40 | +85 | ℃ |

## 5.2 Recommended Operating Conditions

Table 7 N39 operating conditions

| Parameter | Symbol | Min | Typ | Max | Unit |
|---|---|---|---|---|---|
| Operating temperature range | | -40 | +25 | +85 | ℃ |
| Main supply voltage | VCC | 2.8 | 3.3 | 4.3 | V |
| Backup battery voltage | V_BACKUP | 2.0 | 3 | 4.3 | V |

Table 8 N39 standard IO features

| Parameter | Symbol | Min | Typ | Max | Unit |
|---|---|---|---|---|---|
| Low level output voltage<br>Test conditions $I_{OL}$ = 2mA and 4.0mA | $V_{OL}$ | -0.3 | | 0.40 | V |
| High level output voltage<br>Test conditions $I_{OL}$ = 2mA and 4.0mA | $V_{OH}$ | 2.4 | 2.8 | 3.1 | V |
| Low level input voltage | $V_{IL}$ | -0.3 | | 0.8 | V |
| High level input voltage | $V_{IH}$ | 2.0 | | 3.6 | V |
| Input Pull-up resistance | $R_{PU}$ | 40 | | 190 | KΩ |
| Input Pull-down resistance | $R_{PD}$ | 40 | | 190 | KΩ |
| Input capacitance | $C_{IN}$ | | 5 | | pF |
| Load capacitance | $C_{load}$ | | | 8 | pF |
| Tri-state leakage current | $I_{OZ}$ | -10 | | 10 | uA |

## 5.3 Electro-Static Discharge

The GPS engine is not protected against Electrostatic Discharge (ESD) in general. Therefore, it is subject to ESD handing precautions that typically apply to ESD sensitive components. Proper ESD handing and packaging procedures must be applied throughout the processing, handing and operation of any application using a N39 module. The ESD test results are shown in the following table.

Table 9 The ESD characteristics (Temperature: 25℃, Humidity: 45 %)

| Pin | Contact discharge | Air discharge |
|---|---|---|
| VCC | ±5KV | ±10KV |
| Antenna | ±5KV | ±10KV |
| VCC_BACKUP | ±5KV | ±10KV |

| | | |
|---|---|---|
| GND | ±5KV | ±10KV |
| RXD,TXD | ±4KV | ±8KV |
| TIMEMARK | ±4KV | ±8KV |

# 6. Manufacturing

## 6.1 Top and Bottom View of N39

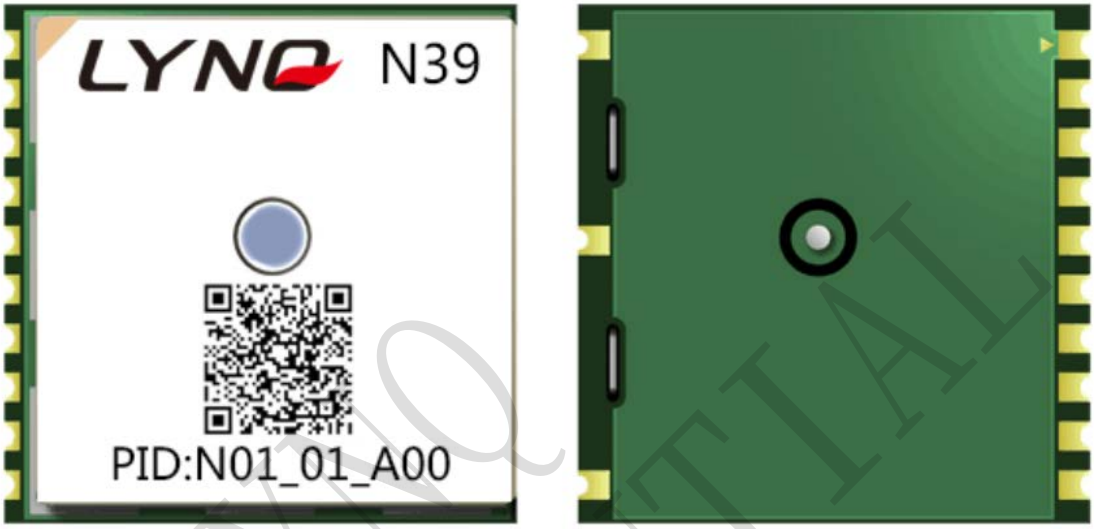


Figure 7 Top and bottom view of N39

## 6.2 Assembly and Soldering

The N39 module is intended for SMT assembly and soldering in a Pb-free reflow process on the top side of the PCB. Suggested solder paste stencil height is 150um minimum to ensure sufficient solder volume. If required paste mask pad openings can be increased to ensure proper soldering and solder wetting over pads.

The following figure is the Ramp-Soak-Spike Reflow Profile of N39:

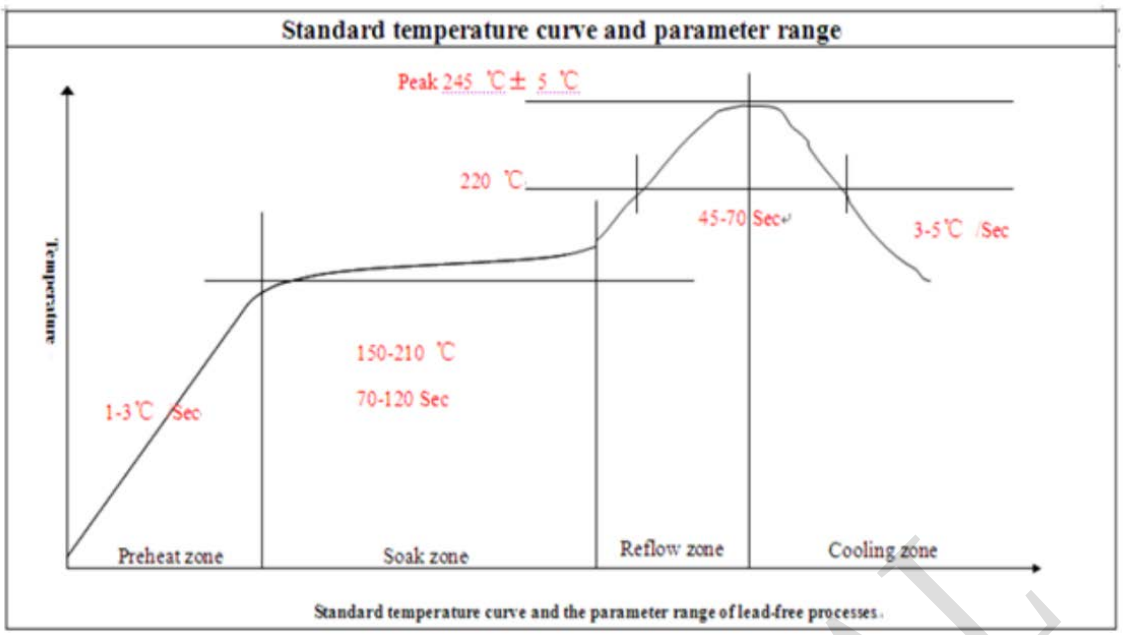


Figure 8 The Ramp-Soak-Spike reflow profile of N39

N39 is Moisture Sensitive Devices (MSD), appropriate MSD handling instruction and precautions are summarized in Chapter 6.3.

N39 modules are also Electrostatic Sensitive Devices (ESD), handling N39 modules without proper ESD protection may destroy or damage them permanently. Avoid ultrasonic exposure due to internal crystal and SAW components.

## 6.3 Moisture sensitivity

N39 module is moisture sensitive at MSL level 3, dry packed according to IPC/JEDEC specification J-STD-020C. The calculated shelf life for dry packed SMD packages is a minimum of 6 months from the bag seal date, when stored in a non condensing atmospheric environment of <40°C/90% RH.

Table 10 lists floor life for different MSL levels in the IPC/JDEC specification:

Table 10 Moisture Classification Level and Floor Life

| Level | Floor Life(out of bag)at factory ambient≦+30℃/60%RH or as stated |
|---|---|
| 1 | Unlimited at≦+30℃/85% RH |
| 2 | 1 year |
| 2a | 4 weeks |
| 3 | 168 hours |
| 4 | 72 hours |
| 5 | 48 hours |
| 5a | 24 hours |
| 6 | Mandatory bake before use. After bake, module must be reflowed within the time limit specified on the label. |

Factory floor life is 1 week for MSL 3, N39 must be processed and soldered within the time. If this time is exceeded, the devices need to be pre-baked before the reflow solder process.

Both encapsulate and substrate materials absorb moisture. IPC/JEDEC specification J-STD-020 must be observed to prevent cracking and delamination associated with the "popcorn" effect during reflow soldering. The popcorn effect can be described as miniature explosions of evaporating moisture. Baking before processing is required in the following case:

- Floor life or environmental requirements after opening the seal have been exceeded, e.g. exposure to excessive seasonal humidity.

Refer to Section 4 of IPC/JEDEC J-STD-033 for recommended baking procedures.

## 6.4 ESD handling precautions

N39 module is Electrostatic Sensitive Devices (ESD). Observe precautions for handling! Failure to observe these precautions can result in severe damage to the GPS receiver!

GPS receivers are Electrostatic Sensitive Devices (ESD) and require special precautions when handling. Particular care must be exercised when handling patch antennas, due to the risk of electrostatic charges. In addition to standard ESD safety practices, the following measures should be taken into account whenever handling the receiver.

Unless there is a galvanic coupling between the local GND (i.e. the work Table) and the PCB GND, then the first point of contact when handling the PCB shall always be between the local GND and PCB GND.Before mounting an antenna patch, connect ground of the device

When handling the RF pin, do not come into contact with any charged capacitors and be careful when contacting materials that can develop charges (e.g. patch antenna ~10pF, coax cable ~50-80pF/m, soldering iron, …)To prevent electrostatic discharge through the RF input, do not touch the mounted patch antenna.

When soldering RF connectors and patch antennas to the receiver's RF pin, the user must make sure to use an ESD safe soldering iron (tip).

## 6.5 Shipment

N39 is designed and packaged to be processed in an automatic assembly line, and it is now packaged tray and reel.

# 7. Reference Design

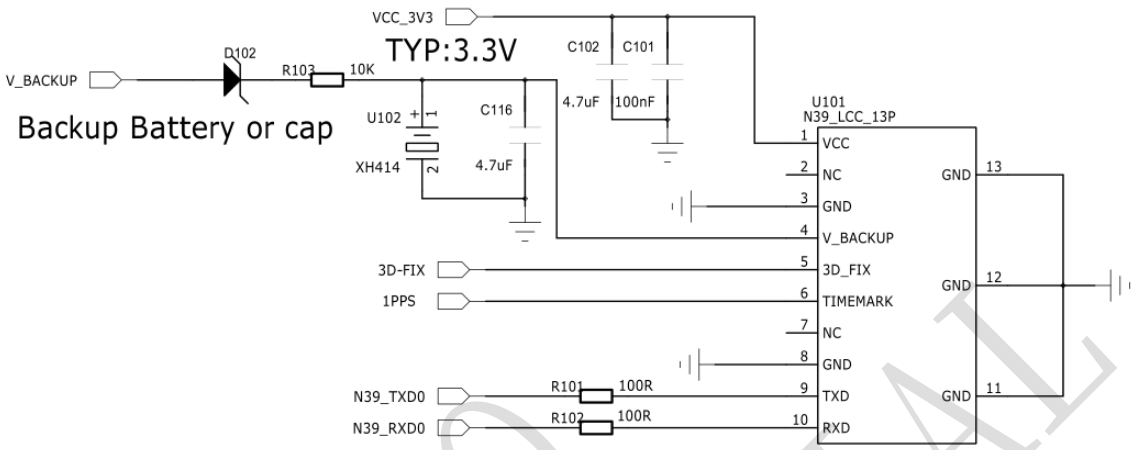


Figure 9 Application schematics

## Appendix

### A. Related Documents

Table 11 Related documents

| SN | Document name | Remark |
|---|---|---|
| [1] | MT3337 Platform NMEA Message Specification | |
| [2] | EPO-II Format Protocol Customer | EPO-II Format and Protocol |

### B. Terms and Abbreviations

| Abbreviation | Description |
|---|---|
| A-GPS | Assisted Global Positioning System |
| CMOS | Complementary Metal Oxide Semiconductor |

| | |
|---|---|
| CEP | Circular Error Probable |
| DGPS | Difference Global Positioning System |
| EEPROM | Electrically Erasable Programmable Read Only Memory |
| EPO | Extended Prediction Orbit |
| ESD | Electrostatic Sensitive Devices |
| EASY | Embedded Assist System |
| GPS | Global Positioning System |
| I/O | Input/Output |
| IC | Integrated Circuit |
| Inorm | Normal Current |
| Imax | Maximum Load Current |
| kbps | Kilo bits per second |
| MSL | moisture sensitive level |
| NMEA | National Marine Electronics Association |
| PRN | Pseudo Random Noise Code |
| QZSS | Quasi-Zenith Satellites System |